DWG No. NAM-SL901-IN-00-EN

VOIR ASSEMBLAGE/SEE ASS'Y: –

No. DE DESSIN / DWG No.: –

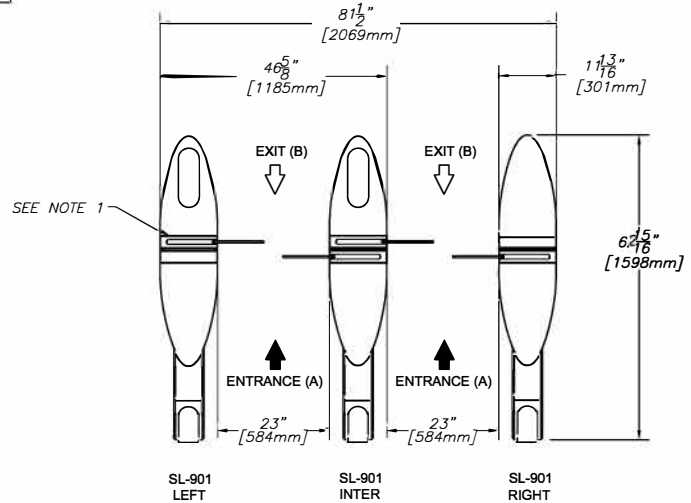

GLASS HEIGHT		
A	39"(990mm)	OPTION
B	47"(1194mm)	OPTION
C	67"(1701mm)	STD

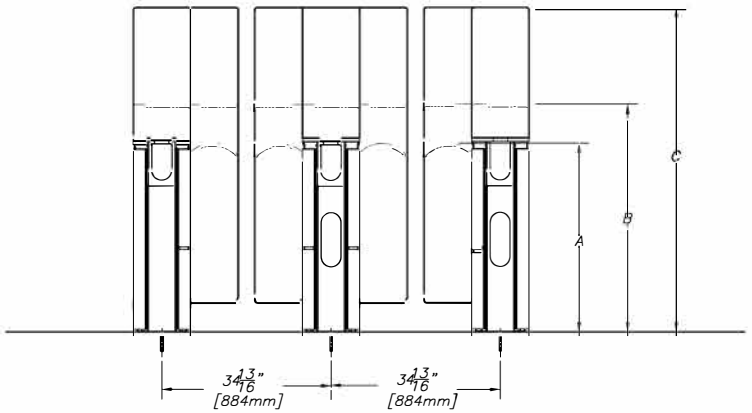

ENTRANCE VIEW

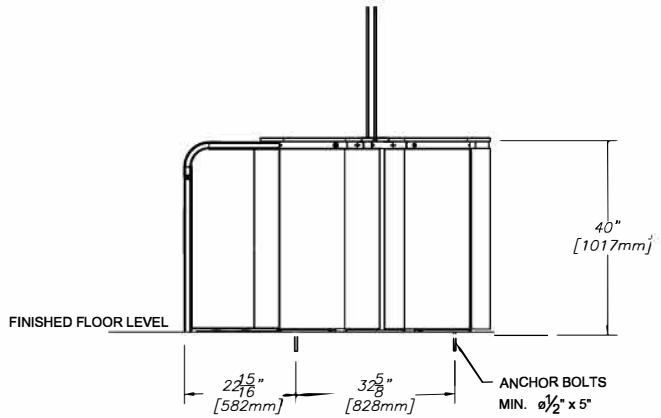

NOTE:
1–SHUTTERS ONLY PRESENT ON UNITS WITH 47" OR 67" GLASS.
2–FOR ELECTRICAL CONNECTIONS AND CONDUITS LAYOUT
REFER TO NAM-SL-EL-EN-01.

AUTOMATIC SYSTEMS MAKES NO REPRESENTATION AS TO THE PROPER POSITIONING OF THE SECURITY ENTRANCE LANES AT THE INSTALLATION LOCATION. ESTABLISHING THE LAYOUT AND PLACEMENT OF THE UNIT(S) AND DETERMINING COMPLIANCE WITH THE APPLICABLE BUILDING CODES, OTHER CODES, LAWS AND REGULATIONS IS THE SOLE RESPONSIBILITY OF THE PURCHASER. INSTALLATION MUST BE PERFORMED BY A QUALIFIED INSTALLER FOLLOWING MANUFACTURER'S INSTRUCTIONS, OTHERWISE AUTOMATIC SYSTEMS' WARRANTIES MAY BE VOID.

REV.	DATE	MODIFICATIONS/CHANGES	PAR/BY
A	06/01/2012	NEW RELEASE	JPS

MATERIAL –
FICHIER / FILENAME NAM-SL901-IN-00-EN.DWG
FABRICATION –
TRAITEMENT/TREATMENT –
EBARBER LES ARÊTES VIVES / BREAK ALL SHARP EDGES
Nb./App. –
POIDS/WEIGHT –
SURFACE –
FINI/FINISH –

LES INFORMATIONS CONTENUES SUR LES DESSINS DE ASA Inc. SONT CONFIDENTIELLES ET SONT LA PROPRIÉTÉ DE ASA Inc. TOUTES REPRODUCTIONS, DISTRIBUTIONS OU UTILISATIONS SONT INTERDITES SANS LA PERMISSION ÉCRITE DE ASA Inc.

INFORMATION DISCLOSED HERE IS CONFIDENTIAL AND IS THE PROPERTY OF ASA Inc., ANY REPRODUCTION, DISTRIBUTION OR USE IS PROHIBITED WITHOUT A WRITTEN CONSENT BY ASA Inc.

IMPERIAL	METRIC
X/X ±1/32"	X ±1mm
X.X ±0.030"	X.X ±0.5mm
X.XX±0.015"	X.XX±0.05mm
X.XXX±0.005"	

ANGLES ± 1/2°
SAUF SI INDIQUÉS / UNLESS OTHERWISE NOTED

DIMENSIONS –
FORMAT B

automatic systems america inc.

TITRE / TITLE SL-901 2LANES

DESSINÉ PAR / DRAWN BY	ÉCHELLE/SCALE	DATE	FEUILLE/SHEET	DE/OF
JPS	N/A	06/01/2012	1	1

VÉRIFIÉ PAR / CHECKED BY –
No. DESSIN/DWG. No. NAM-SL901-IN-00-EN
REV. A