NO. DE DESSIN
DWG NO. NAM-TL1-IN-001-EN

DIMENSIONS	Y	Z
STANDARD	20 1/16" [510mm]	22 1/16" [560mm]
OPTION	21 21/32" [550mm]	23 21/32" [601mm]

DIMENSIONS	X
COLLAPSIBLE ARM	28 15/16" [735mm]
STANDARD ARM	29 1/8" [740mm]

NOTES:
1- TRILANE NOTES:
-ALL WIRING MUST MEET OR EXCEED STANDARDS, CODES AND MUST BE INSTALLED BY A CERTIFIED TECHNICIAN.

-1/2 " X 5.5" ANCHORING FURNISHED BY ASA. (DRILL SIZE ø1/2")

-RESPECT ALL STANDARDS AND LAWS APPLICABLE WHERE THE PRODUCT WILL BE INSTALLED.

2-CABLE NOTES:
-THIS WORK IS TO BE CONSIDERED BY THE CUSTOMER.
-ALL CABLES MUST EXCEED THE GROUND BY 10'.
-A PULL CABLE MUST BE CONSIDERED BETWEEN EACH GATE.

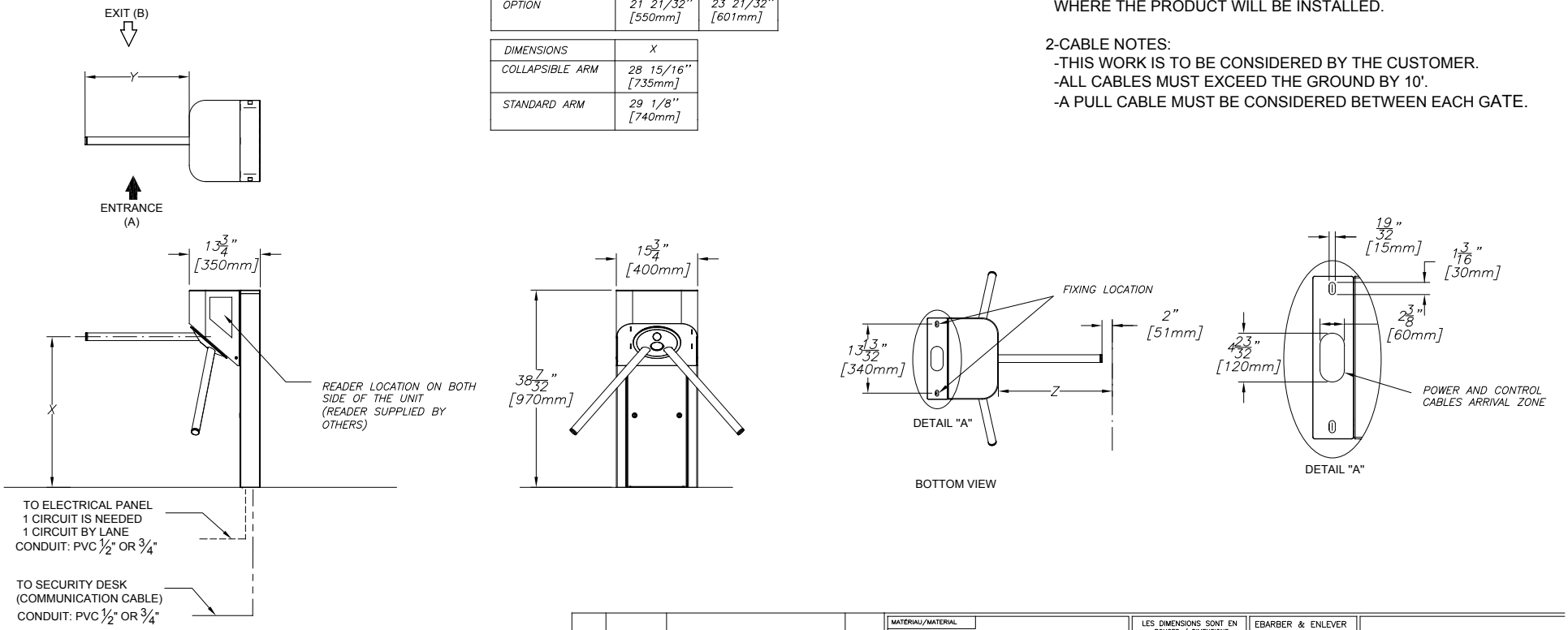

AUTOMATIC SYSTEMS MAKES NO REPRESENTATION AS TO THE PROPER POSITIONING OF THE TURNSTILES AT THE INSTALLATION LOCATION. ESTABLISHING THE LAYOUT AND PLACEMENT OF THE UNIT(S) AND DETERMINING COMPLIANCE WITH THE APPLICABLE BUILDING CODES, OTHER CODES, LAWS AND REGULATIONS IS THE SOLE RESPONSIBILITY OF THE PURCHASER. INSTALLATION MUST BE PERFORMED BY A QUALIFIED INSTALLER FOLLOWING MANUFACTURER'S INSTRUCTIONS, OTHERWISE AUTOMATIC SYSTEMS' WARRANTIES MAY BE VOID.

REV	DATE	MODIFICATIONS/CHANGES	PAR/BY

REVISIONS

MATÉRIAU/MATERIAL
TRAITEMENT/TREATMENT
FINI/FINISH
NB./App. | POIDS/WEIGHT | SURFACE

LES DIMENSIONS SONT EN POUCES / DIMENSIONS ARE IN INCHES
TOLERANCES
.XXX ± .005
.XX ± .010
.X ± .015
FRAC. ± 1/32
ANGLES ±1/2°
SAUF SI INDIQUÉS
UNLESS OTHERWISE NOTED

EBARBER & ENLEVER LES ARÊTES VIVES. DIM SELON ASME Y14.5 1994. NE PAS MESURER SUR LE DESSIN
BREAK ALL SHARP EDGES AND CORNERS. ALL DIM PER ASME Y14.5 1994. DO NOT SCALE DRAWING

AUTOMATIC SYSTEMS

FICHER / FILENAME
NAM-TL1-IN-001-EN.DWG

LES INFORMATIONS CONTENUES SUR LES DESSINS DE ASA Inc. SONT CONFIDENTIELLES ET SONT LA PROPRIÉTÉ DE ASA Inc., TOUTES REPRODUCTIONS, DISTRIBUTIONS OU UTILISATIONS SONT INTERDITES SANS LA PERMISSION DE ASA Inc.

INFORMATION DISCLOSED HERE IS CONFIDENTIAL AND IS THE PROPERTY OF ASA Inc., ANY REPRODUCTION, DISTRIBUTION OR USE IS PROHIBITED WITHOUT A WRITTEN CONSENT BY ASA Inc.

TITRE / TITLE: IMPLEMENTATION DRAWING TL1

ÉCHELLE/SCALE	FORMAT/SIZE	DATE	FEUILLE/SHEET	DE/OF
N/A	B	2020/05/26	1	1

DESSINÉ PAR / DRAWN BY: VBO
VÉRIFIÉ PAR / CHECKED BY: JPS
NO. DE DESSIN/DWG. NO.: NAM-TL1-IN-001-EN
REV: A

CARTOUCHE FORMAT B V. 2009-12-